FOODBOXER & SANIBOXER

air-operated double diaphragm pumps

www.debem.it

DEBEM®

INDUSTRIAL PUMPS

for handling food, cosmetic and pharmaceutical fluids

Made in Italy

TÜV NORD ISO 9001

CE

TÜV NORD Dossier stored Directive 94/9/EG

A3

FDA compliant

FOODBOXER FDA
compliant

FDA Foodboxer Debem pumps are designed for food and cosmetics industry, all materials used for their manufacture fulfill FDA requirements. The pumps are made in stainless steel AISI 316 electro-polished, achieving a medium roughness of 2,7µm.

Foodboxer diaphragm pumps are characterized by exceptional performance, power and strength, making them ideal for pumping liquids with very high apparent viscosity up to **50000 cps (at 20°C)**, even if containing suspended solids. The **stall-prevention** pneumatic system assures a safe pump running and it **does not need lubricated air**.
Self-priming dry capacity even with considerable suction head, **fine tuning of speed** without pressure loss and the **possibility of dry operation without suffering damage** mean that these pumps offer unrivalled versatility. In addition, the huge choice of construction materials allows selection of optimum chemical compatibility with the fluid and/or environment without neglecting the temperature range. They are specifically designed for demanding **applications with high humidity or in potentially explosive atmospheres (ATEX certification).**

DESCRIPTION OF THE PUMP

Debem diaphragm pumps consist of a **stall-prevention centrally-housed pneumatic exchangers**. The new generation diaphragms (**Long Life** profile) are fitted to its shaft. At the two ends, the two pump casings house the ball valves and seats of the product suction and delivery duct.

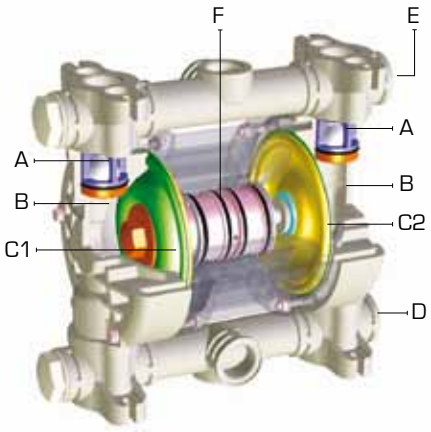

A = ball valves
B = pumping chamber
C1 = product-side diaphragm
C2 = air-side diaphragm
D = suction manifold
E = delivery manifold
F = pneumatic exchengers

HOW IT WORK

The compressed air introduced by the pneumatic exchanger **(A)** behind one of the two diaphragms generates compression and pushes the product into the delivery duct **(B)**, at the same time the opposing diaphragm that is integral with the exchanger shaft creates a vacuum and intakes the fluid **(C)**.
Once the stroke has been completed, the pneumatic exchanger diverts the compressed air behind the opposing diaphragm and the cycle is reversed.
For further information regarding operation, please visit our website: www.debem.it/ing/animazione.html

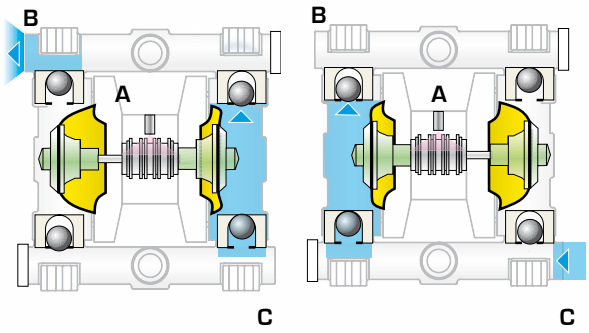

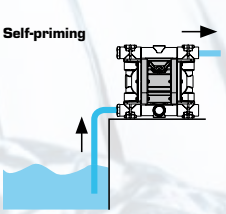

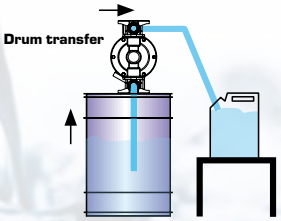

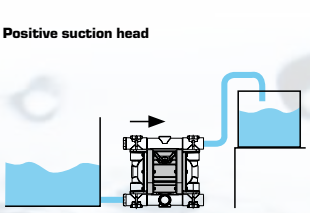

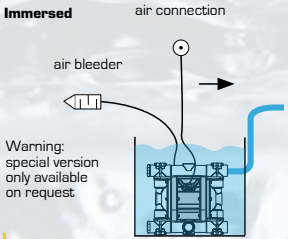

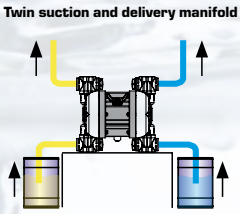

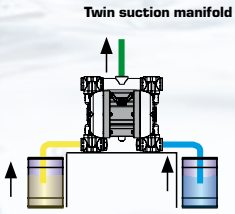

DEBEM **FOODBOXER FDA**

FOODBOXER diaphragm pneumatic pumps are manufactured fulfilling FDA requirements. All materials in contact with the liquid are realized according to FDA requirements. The whole range is in AISI 316 electro-polished according to the International Provision AST-MA380 and the medium roughness is 2,7µm.

FOODBOXER FDA
compliant

PNEUMATIC EXCHANGERS

The heart of an air-operated diaphragm pump con-sists of the stall-prevention pneumatic exchanger that DEBEM has succeeded in developing and inno-vating in a revolutionary manner, patenting the most durable and reliable system the market currently has to offer. This device introduces compressed air to alter the pressure balance of the diaphragms assisted by a stall-prevention circuit that ensures optimum performance even under the most critical conditions.

THE COMPONENTS

It has an extremely compact footprint and the small number of components ensures exceptional sturdiness and service life even under the most exacting conditions.The air passages are carefully designed and optimised to prevent the formation of ice even in low-temperature and high-head applications.The DEBEM pneumatic exchanger is an integrated system with a single central cartridge that does not require additional external components.

OPERATION

The range of DEBEM diaphragm pumps features a pneumatic exchanger that guarantees faultless op-eration even with low-pressure compressed air supplies (min 2 bar). Air-chamber volumes and airways are carefully designed to optimise consumption. Speed and flow rate can be easily adjusted by regulating air flow, whilst head can be adjusted as a function of compressed air supply pressure.

DEBEM DIAPHRAGMS

Diaphragms are the components subjected to greatest stress during suction and pumping, when they must also withstand the liquid's chemical attack and temperature. Correct assessment and selection is therefore crucial for diaphragm service life, investment decisions and maintenance costs. A modern process of design, destructive testing and careful analysis of results has enabled DEBEM to develop LONG LIFE new generation diaphragms. The shape and profile of these products provides a greater working surface and improved load redistribution, thus reducing material stress and yield to a minimum.

THERMOPLASTIC DIAPHRAGM

They are made from thermoplastic polymers that provide high mechanical stress resistance and distribution.

HYTREL: good abrasion resistance and suitable for food processing.

PTFE DIAPHRAGM

This material is noted for its excellent resistance to high temperatures, chemicals and corrosive agents. DEBEM PTFE diaphragms are subjected to a double heat treatment in order to increase elasticity and service life. Each batch undergoes random destructive testing in order to verify its performance.
Assembled with Hytrel diaphragm.

FOODBOXER PUMPS COMPOSITION CODES

es. FB100AHTTAT

Foodboxer 80 in Aisi316 + diaphragm Hytrel + diaphragm PTFE + balls PTFE + ball seats Aisi316 + O rings PTFE

FB100	A	H	T	T	A	T	X	C
PUMP MODEL **FB30 =** Foodboxer 30 **FB50 =** Foodboxer 50 **FB80 =** Foodboxer 80 **FB100 =** Foodboxer 100 **FB251 =** Foodboxer 251 **FB502 =** Foodboxer 502 **FB503 =** Foodboxer 503	**PUMP BODY** **A =** Aisi316 electro-polished	**AIR SIDE DIAPHRAGM** **H =** Hytrel	**FLUID SIDE DIAPHRAGM** **T =** PTFE	**BALLS** **T =** PTFE **A =** AISI 316	**BALL SEATS** **A =** AISI 316	**O-RINGS** **T =** PTFE	**TWIN MANIFOLD** **X = if requested**	**CONDUCT VERSION (zone 1)** Ex **II 2/2 GD c IIB T135°C** **C = if requested**

FOODBOXER 30

FDA compliant

DEBEM

STANDARD: II 3/3 GD c IIB T135°C (zone 2) - **CONDUCT**: II 2/2 GD c IIB T135°C (zone 1)

Intake/delivery connections	G 1/2" f available with triclamp or din connections on request
Air connection	G 1/4" f
Max. self-priming capacity	6 m
Max. flow rate*	30 l/min
Max. head*	70 m
Max. air supply pressure	7 bar
Max. diameter of passing solids	2 mm

Construction materials	Weight	Max. operating temp
Aisi316 electro-polished	3,8 Kg	95°C

TECHNICAL DATA

PERFORMANCE

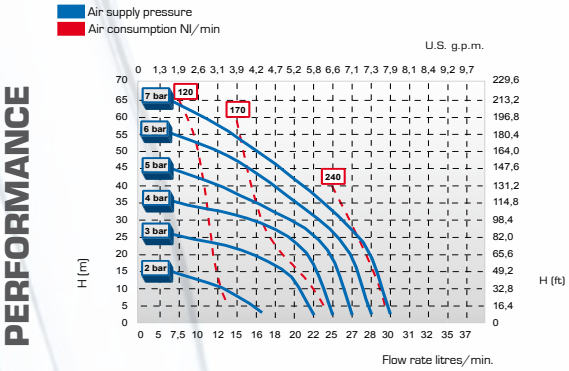

DIMENSIONS

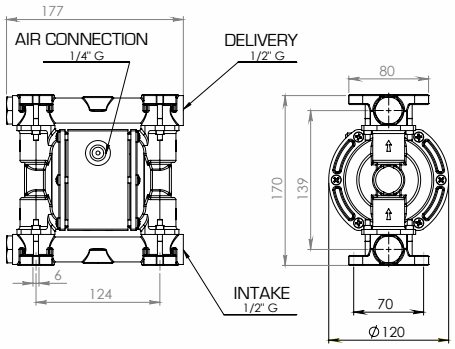

The dimensions shown are in mm

FOODBOXER 50

FDA compliant

STANDARD: II 3/3 GD c IIB T135°C (zone 2) - **CONDUCT**: II 2/2 GD c IIB T135°C (zone 1)

Intake/delivery connections	G 1/2" f (standard) available with triclamp or din connections on request
Air connection	G 3/8" f
Max. self-priming capacity	5 m
Max. flow rate*	50 l/min
Max. head*	70 m
Max. air supply pressure	7 bar
Max. diameter of passing solids	4 mm

Construction materials	Weight	Max. operating temp
Aisi316 electro-polished	6,5 Kg	95°C

TECHNICAL DATA

PERFORMANCE

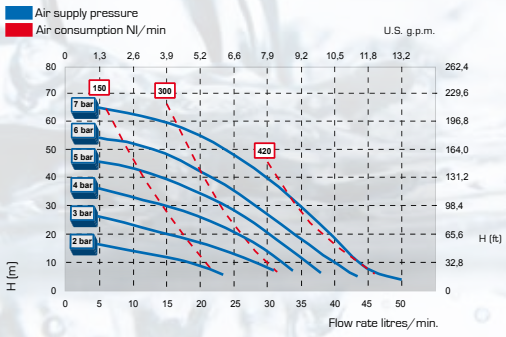

DIMENSIONS

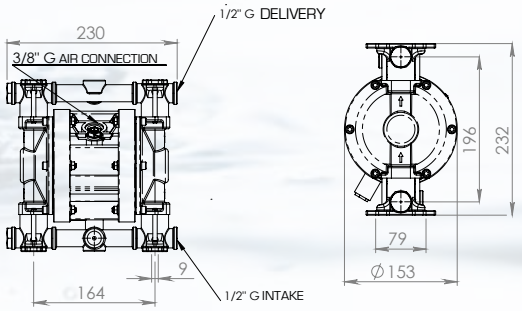

The dimensions shown are in mm

*The curves and performance values refer to pumps with submerged suction and a free delivery outlet with water at 20°C, and vary according to the construction material.

FOODBOXER 80

FDA compliant

DEBEM

STANDARD: II 3/3 GD c IIB T135°C (zone 2) - **CONDUCT**: II 2/2 GD c IIB T135°C (zone 1)

TECHNICAL DATA

Intake/delivery connections	G 1" f (standard) available with triclamp or din connections on request
Air connection	G 3/8" f
Max. self-priming capacity	6 m
Max. flow rate*	100 l/min
Max. head*	70 m
Max. air supply pressure	7 bar
Max. diameter of passing solids	4 mm

Construction materials	Weight	Max. operating temp
Aisi316 electro-polished	10,5 Kg	95°C

PERFORMANCE

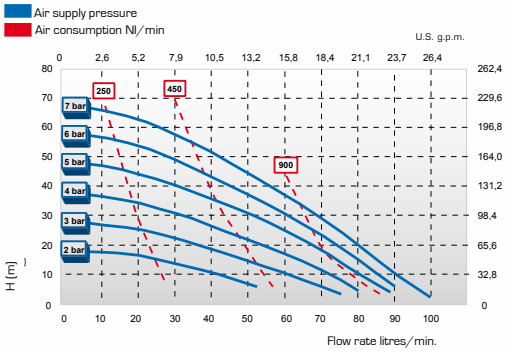

DIMENSIONS

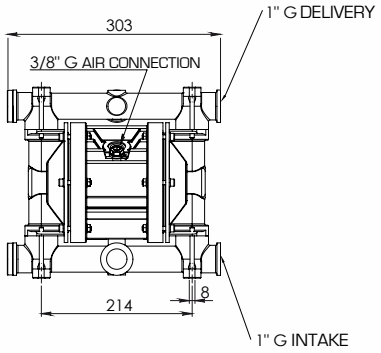

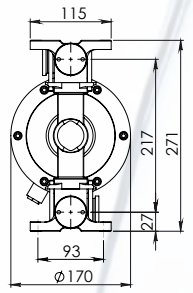

The dimensions shown are in mm

FOODBOXER 100

FDA compliant

STANDARD: II 3/3 GD c IIB T135°C (zone 2) - **CONDUCT**: II 2/2 GD c IIB T135°C (zone 1)

TECHNICAL DATA

Intake/delivery connections	G 1" f (standard) available with triclamp or din connections on request
Air connection	G 3/8" f
Max. self-priming capacity	5 m
Max. flow rate*	150 l/min
Max. head*	70 m
Max. air supply pressure	7 bar
Max. diameter of passing solids	4 mm

Construction materials	Weight	Max. operating temp
Aisi316 electro-polished	11 Kg	95°C

PERFORMANCE

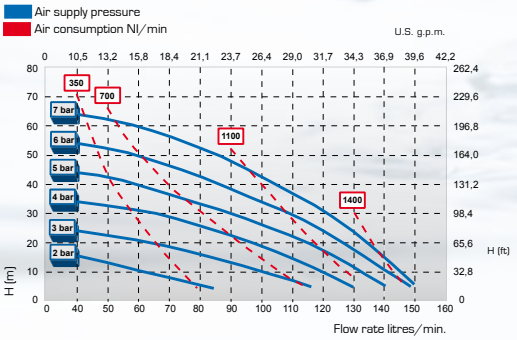

DIMENSIONS

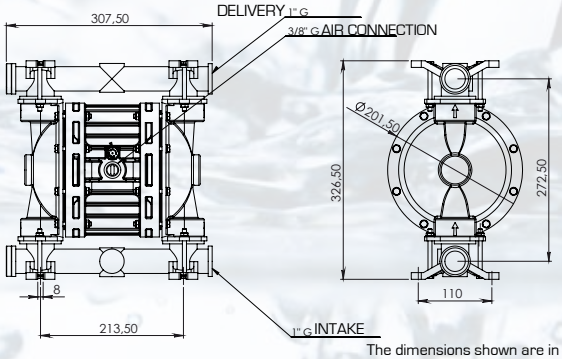

The dimensions shown are in mm

*The curves and performance values refer to pumps with submerged suction and a free delivery outlet with water at 20°C, and vary according to the construction material.

FOODBOXER 150 FDA

compliant

STANDARD: II 3/3 GD c IIB T135°C (zone 2) - **CONDUCT**: II 2/2 GD c IIB T135°C (zone 1)

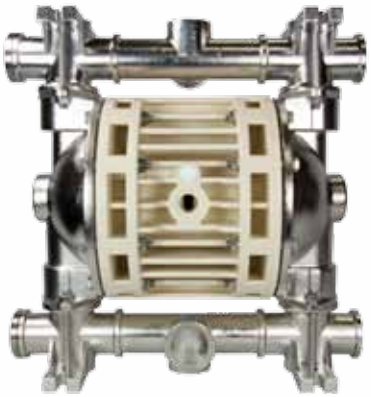

Intake/delivery connections	G 1" 1/4 f (standard) available with triclamp or din connections on request
Air connection	G 1/2" f
Max. self-priming capacity	5 m
Max. flow rate*	220 l/min
Max. head*	70 m
Max. air supply pressure	7 bar
Max. diameter of passing solids	5 mm

Construction materials	Weight	Max. operating temp
Aisi316 electro-polished	21 Kg	95°C

TECHNICAL DATA

PERFORMANCE

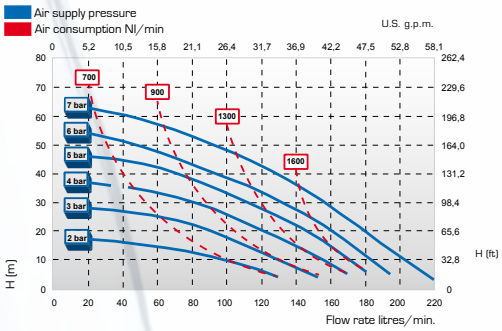

DIMENSIONS

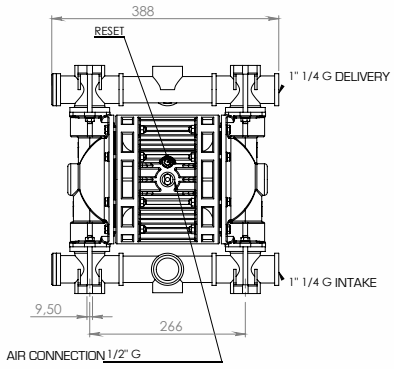

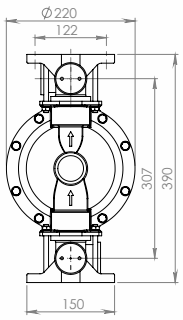

The dimensions shown are in mm

FOODBOXER 251 FDA

compliant

STANDARD: II 3/3 GD c IIB T135°C (zone 2) - **CONDUCT**: II 2/2 GD c IIB T135°C (zone 1)

Intake/delivery connections	G 1" 1/2 f (standard) available with triclamp or din connections on request
Air connection	G 1/2" f
Max. self-priming capacity	6 m
Max. flow rate*	340 l/min
Max. head*	70 m
Max. air supply pressure	7 bar
Max. diameter of passing solids	6 mm

Construction materials	Weight	Max. operating temp
Aisi316 electro-polished	32 Kg	95°C

TECHNICAL DATA

PERFORMANCE

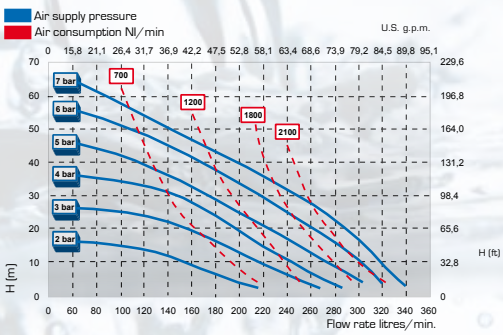

DIMENSIONS

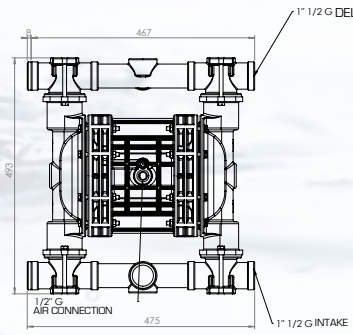

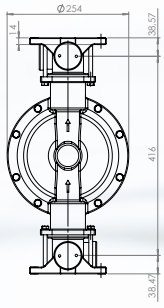

The dimensions shown are in mm

*The curves and performance values refer to pumps with submerged suction and a free delivery outlet with water at 20°C, and vary according to the construction material.

FOODBOXER 502 FDA

compliant

STANDARD: II 3/3 GD c IIB T135°C (zone 2) - **CONDUCT**: II 2/2 GD c IIB T135°C (zone 1)

TECHNICAL DATA

Intake/delivery connections	G 2" f (standard) available with triclamp or din connections on request
Air connection	G 1/2" f
Max. self-priming capacity	4 m
Max. flow rate*	650 l/min
Max. head*	70 m
Max. air supply pressure	7 bar
Max. diameter of passing solids	8 mm

Construction materials	Weight	Max. operating temp
Aisi316 electro-polished	54 Kg	95°C

PERFORMANCE

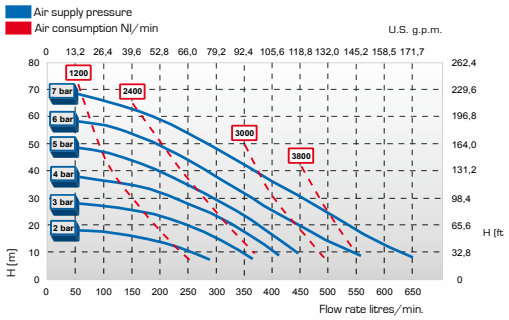

DIMENSIONS

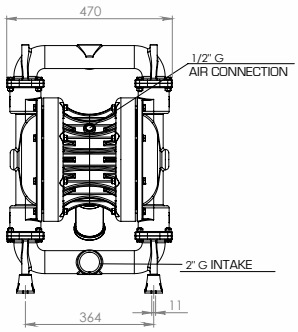

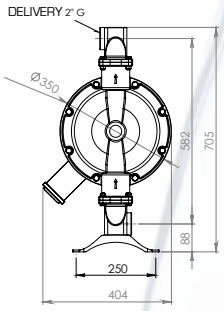

The dimensions shown are in mm

FOODBOXER 503 FDA

compliant

STANDARD: II 3/3 GD c IIB T135°C (zone 2) - **CONDUCT**: II 2/2 GD c IIB T135°C (zone 1)

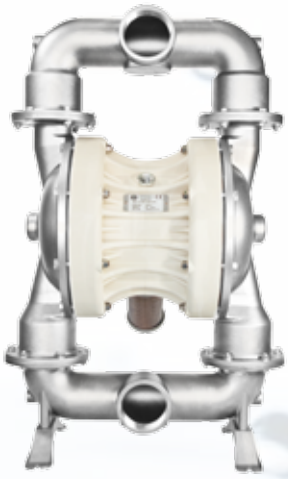

TECHNICAL DATA

Intake/delivery connections	G 3" f (standard) available with triclamp or din connections on request
Air connection	G 3/4" f
Max. self-priming capacity	5 m
Max. flow rate*	900 l/min
Max. head*	70 m
Max. air supply pressure	7 bar
Max. diameter of passing solids	10 mm

Construction materials	Weight	Max. operating temp
Aisi316 electro-polished	54 Kg	95°C

PERFORMANCE

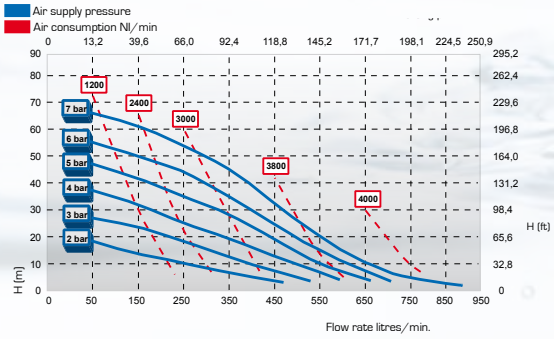

DIMENSIONS

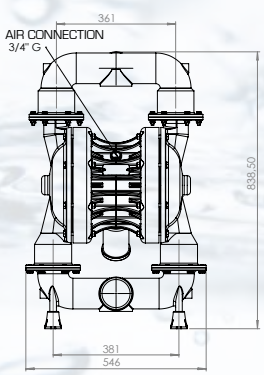

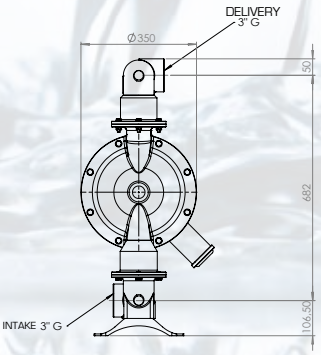

The dimensions shown are in mm

*The curves and performance values refer to pumps with submerged suction and a free delivery outlet with water at 20°C, and vary according to the construction material.

SANIBOXER

SANITARY DIAPHRAGM PUMP for handling food, cosmetic and pharmaceutical fluids

1544

3A Certified, made in stainless steel Aisi316 mechanically polished achieving a roughness < 0,8µm, SANIBOXER pump is designed for food, pharmaceutical and cosmetics sectors.

FIELDS OF APPLICATION

SANIBOXER diaphragm pneumatic pumps have been designed and manufactured for pumping liquids with apparent viscosity from 1 to 15.000 cps at 20°C (see installation type). They are made with materials compatible with fluids according to 3A certification and the chemical stuffs to be used for pump's cleaning and sterilization and the C.I.P. washing.

The pump's functioning is allowed with exercise temperature (fluid temperature + room temperature) compatible with pump components materials and never above 95°C..

FDA compliant

TÜV NORD Dossier stored Directive 94/9/EG

II 2/2GD c IIB T135°C (zona1)
II 3/3GD c IIB T135°C (zona2)

Dry self-priming, possibility to perform **a thin regulation of the speed** without losing pressure, as well as the **possibility to run dry without damages,** are characteristics which give to these pumps a versatility of use precedent. Their constructive principle makes **them especially suitable for heavy applications with a lot of humidity or in a potentially explosive environment (ATEX certification).**

SANIBOXER

SANITARY DIAPHRAGM PUMP for handling food, cosmetic and pharmaceutical fluids

Quick emptying system

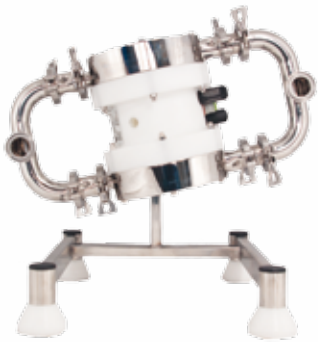

Made in Aisi316 mechanically polished (roughness < 0,8µm)

Initially Issued: 6/10/2010

Authorization No.: 1544

This Is To Certify That

Debem s.r.l.
Via Del Bosco 41, Busto Arsizio, 21052 ITALY

Is hereby authorized to continue to apply the 3-A Symbol to the models of equipment, conforming to 3-A Sanitary Standards for:

Diaphragm Pumps, Number: 44-03, set forth below:
Model Designations: SANIBOXER SB100

Valid through: December 31, 2010

Timothy R. Rugh
Executive Director, 3-A Sanitary Standards, Inc.

*****

The issuance of this authorization for the use of the 3-A Symbol is based upon the voluntary certification, by the applicant for it, that the equipment listed above complies fully with the 3-A Sanitary Standards designated. Legal responsibility for compliance is solely that of the holder of this Certificate of Authorization, and 3-A Sanitary Standards, Inc. does not warrant that the holder of an authorization at all times complies with the provisions of the said 3-A Sanitary Standards. This in no way affects the responsibility of 3-A Sanitary Standards, Inc. to take appropriate action in such cases in which evidence of nonconformance has been established.

Next TPV Inspection/Report due: May 2015

The surfaces, as smooth as a millpond, the absence of grooves where fluid's residues could deposit, allow an easy cleaning of the pump and prevent the consequent formation of bacteria, essential requirement in order to achieve the 3A certification.

Examples of applications

Foodstuffs and dairy products
preserves, milk creams, syrups, milk by-products, alcohol, aromas, chocolate, pasta.

Cosmetics and pharmaceutical products
creams, syrups, gel.

EASY-CLEAN Valve

Patent system

The valve's especial shape locks the sphere and at the same time prevents the formation of fluid's residues, allowing an easy cleaning.

SANIBOXER

SANITARY DIAPHRAGM PUMP for handling food, cosmetic and pharmaceutical fluids

OPTIONALS – Diaphragms' control unit

This system, that can be combined with SANIBOXER diaphragm pumps, provides a self-diagnosis of contacts and of the circuit's correct functioning. In case of malfunction the red warning light comes always on and, depending on the anomaly, also the acoustic signal will activate.

The control unit functions only during the pumping of conductive liquids; it detects the diaphragms' breaking through some contacts positioned behind the diaphragms inside the compression chamber. The presence of liquid between the two sensors causes the closing of the electric circuit placed in the control unit and the consequent commutation of the outlet relay, de-activating in this way the solenoid valve which controls the pump, locking its functioning and activating a visual and an acoustic alarm.

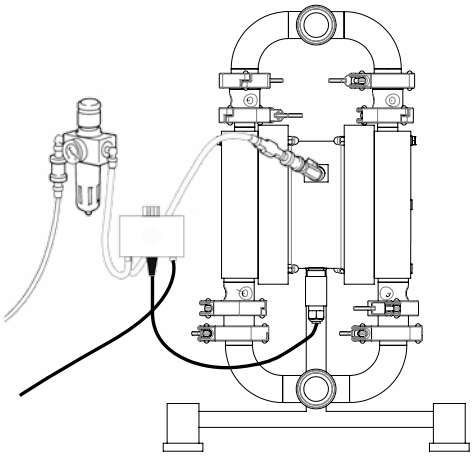

Installation type

NEGATIVE INTAKE:
with fluids maximum up to 5.000 cps at 20°C

UNDERHEAD INTAKE:
with fluids up to 15.000 cps at 20°C

Self-priming

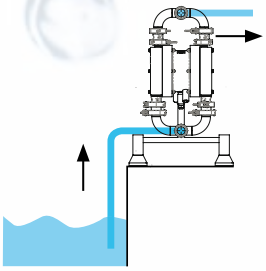

Positive suction head

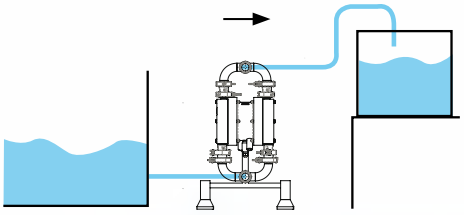

SANIBOXER PUMPS COMPOSITION CODES

es. SB100ADTTAT

Saniboxer 100 in Aisi316 + membrana EPDM + membrana PTFE + sfere Aisi 316 + sedi sfere Aisi316+ O rings PTFE

SB100	A	D	T	T	A	T	C
PUMP MODEL **SB 100 =** **SANIBOXER 100**	**PUMP BODY** **A =** AISI 316	**AIR SIDE** **DIAPHRAGM** **D =** EPDM	**FLUID SIDE** **DIAPHRAGM** **T =** PTFE	**BALLS** **T =** PTFE **A =** AISI 316	**BALL SEATS** **A =** AISI 316	**O-RINGS** **D =** EPDM **T =** PTFE	**CONDUCT** **VERSION** **(zone 1)** **C = If requested**

SANIBOXER

SANITARY DIAPHRAGM PUMP for handling food, cosmetic and pharmaceutical fluids

SANIBOXER 100

Construction materials:
Mechanically polished Aisi316

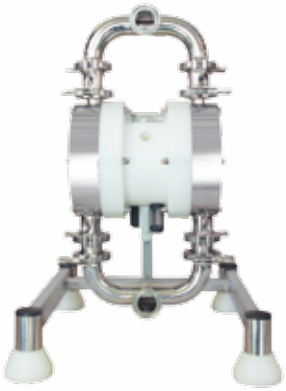

STANDARD: II 3/3 GD c IIB T135°C (zone 2)
CONDUCT: II 2/2 GD c IIB T135°C (zone 1)

TECHNICAL DATA

Intake/delivery connections	1"1/2 clamp
Air connection	3/8"
Max. air supply pressure	7 bar
Max. operating temperature (fluid + amb.)	95°C
Max. head	70m
Dry suction capacity	4m
Max. flow rate (water at 18°C with immersed intake manifold)	120 l/m
Weight	26 KG
Max. diameter of passing solids	4 mm

1544

FDA compliant

PERFORMANCE

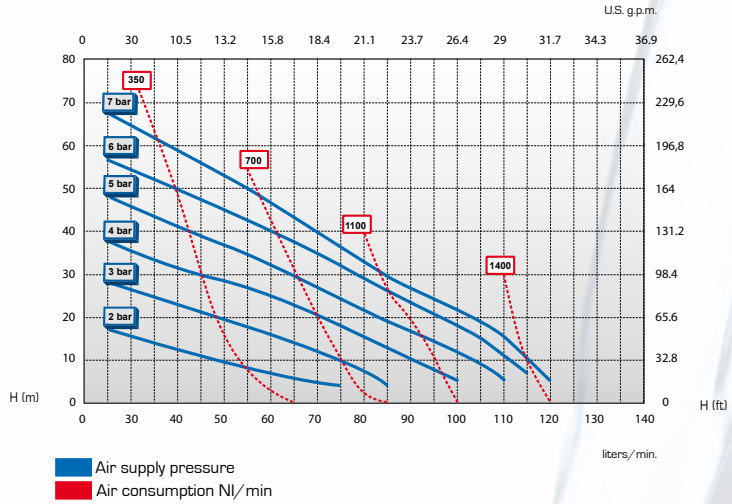

DIMENSIONS

DIAPHRAGMS
Diaphragms made of PTFE with EPDM support

Special "hygienic" design, without fixing nut, this profile avoids residues' deposit and make its cleaning easier.

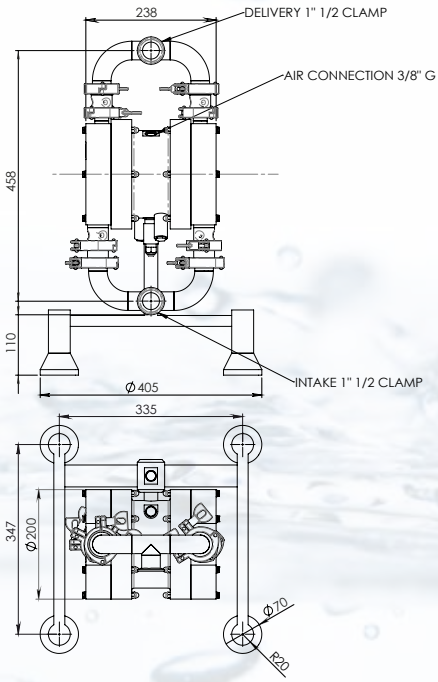

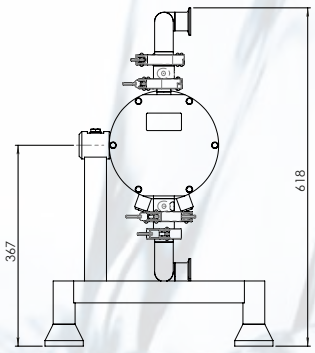

The dimensions shown are in mm

INDUSTRIAL PUMPS

petrochemical, food, mechanical, environmental, printing, chemical, painting, galvanic, textile and ceramic industry

BRFOOD - 05/11 ENG

NORTH AMERICA
CANADA
USA

CENTRAL AMERICA
MEXICO
PANAMA

SOUTH AMERICA
BRASIL
CHILE
COLOMBIA
ECUADOR

EUROPE
AUSTRIA
BELGIUM
BULGARIA
CIPRO
DENMARK
FRANCE
HUNGARY
GEORGIA
GERMANY
GREECE
GREAT BRITAIN
ITALY
ISRAEL
LITUANIA
NORWAY
NETHERLANDS
POLAND
PORTUGAL
CZECH REPUBLIC
ROMANIA
RUSSIA
SPAIN
SWEDEN
SWIZERLAND
TURKEY
UKRAINE

NORTH AFRICA
ALGERIA
EGYPT
TUNISIA

SOUTHERN AFRICA
SOUTH AFRICA
MADAGASCAR

MIDDLE EAST
BAHRAIN
IRAN
IRAQ
QATAR
SIRIA
UNITED ARAB EMIRATES

ASIA
KOREA
CHINA
JAPAN
INDIA
INDONESIA
MALAYSIA
MAURITIUS
PAKISTAN
SINGAPORE
TAIWAN
THAILAND
VIETNAM

OCEANIA
AUSTRALIA
NEW ZEALAND

Made in Italy

FDA compliant

DEBEM s.r.l.
via Del Bosco 41
21052 Busto Arsizio (Va) - Italy
tel. +39 0331 074034
fax +39 0331 074036
www.debem.it - info@debem.it

All the values shown are approximate and not binding. Debem reserves the right to implement changes without prior notice.

imaginaria - www.imaginariaweb.com - tel. +39 03313613